SPRING BALANCER

ENDO

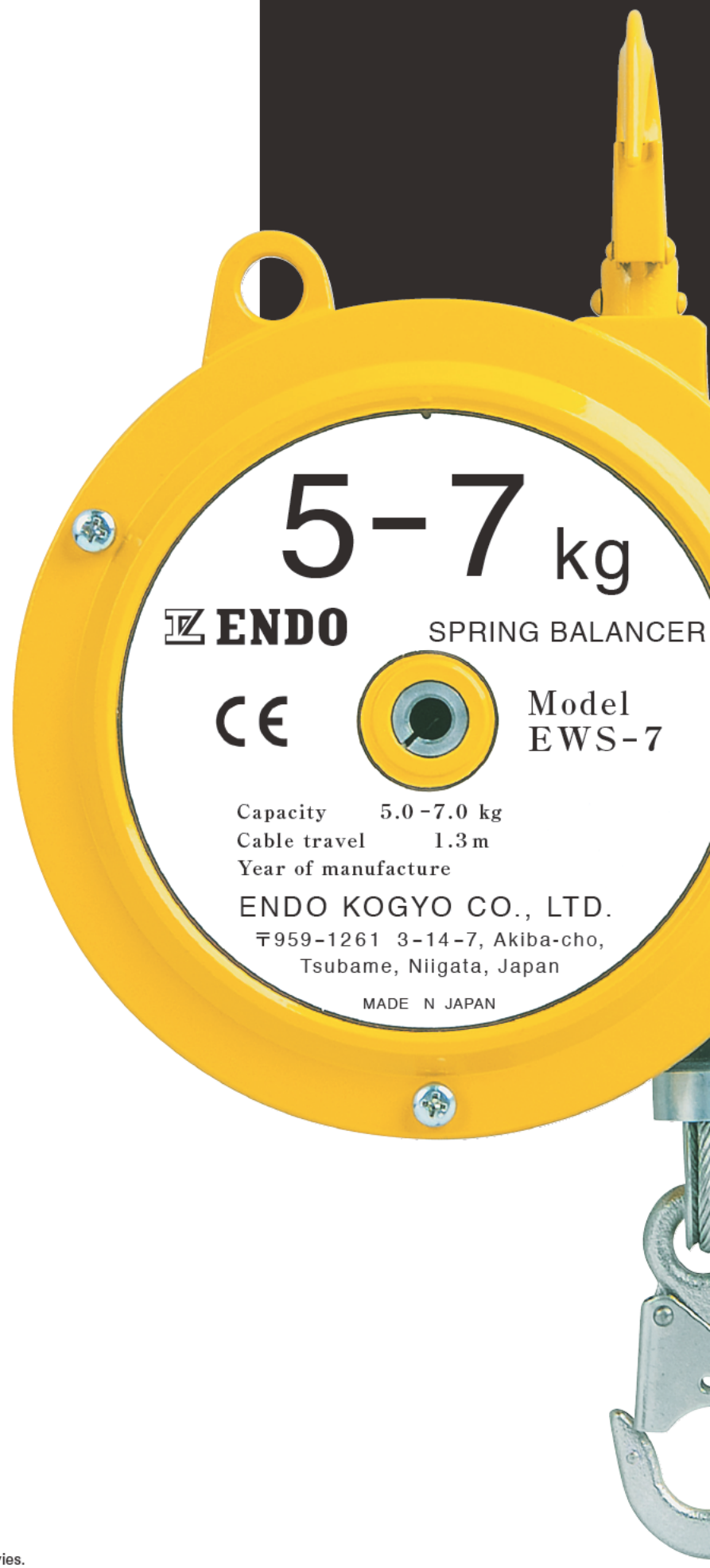

YouTube ENDO KOGYO CO., LTD.

Search with ENDO KOGYO CO LTD on YouTube and check our movies.

SPRING BALANCER

What is Spring balancers?

The tension is kept stable on even if the cable is pulled out or retrieved because of the tapered drum. So Spring balancers can hold the tools suspended in hollow and work for flexible positioning of the tools. Workers can enjoy comfortable operation with less fatigue.

Location of use

- Suspending a tool for product assembly line.
- Frequent fastening screws, bolts and nuts.
- Suspending a jig, tool, welding gun etc.

Advantages

- The balancers improve working efficiency and diminish worker fatigue.
- The balancers make the position of a tool stable and contribute to accurate work.
- The balancers are available for keeping a tool not damaged.
- Any electric or pneumatic power is not required and safe working is achieved.

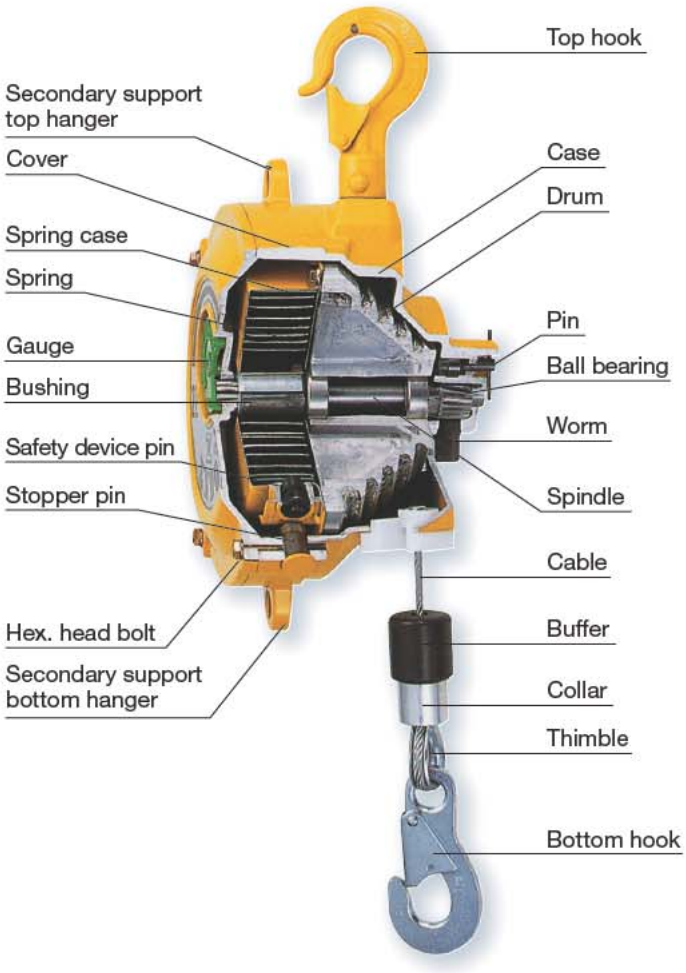

How to adjust spring tension

Worm gear system, Ratchet system or Handle system are available and dependent on the models. Clockwise adjustment increases the spring tension and Counter clockwise adjustment decreases the spring tension. (The spring tension has been set at the middle of capacity in advance prior to shipment)

Handle system	ERP model				
Ratchet system	EK-00,EK-0	EW-3,5	SBC	ER model	ATB model
Worm gear system	EWS model	EWF model	ELF model	RSB model	
	ETP model	THB model	ATR model	EWA model	

Handle system

Ratchet system

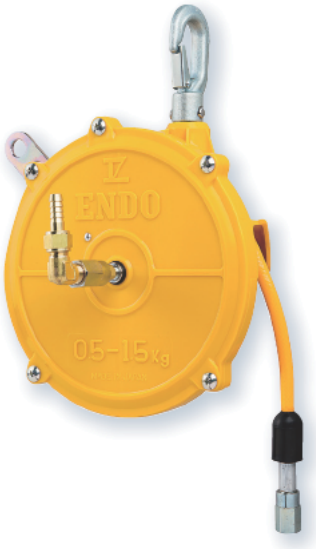

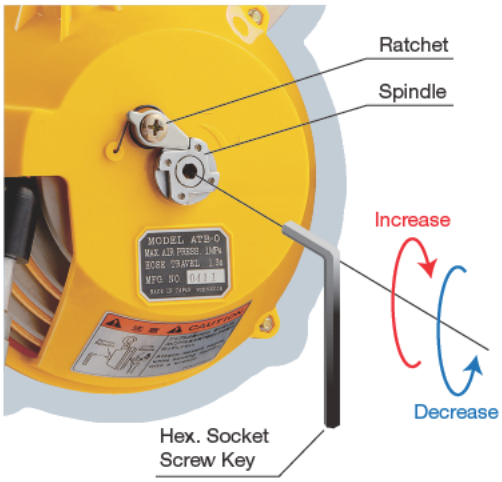

Worm gear system

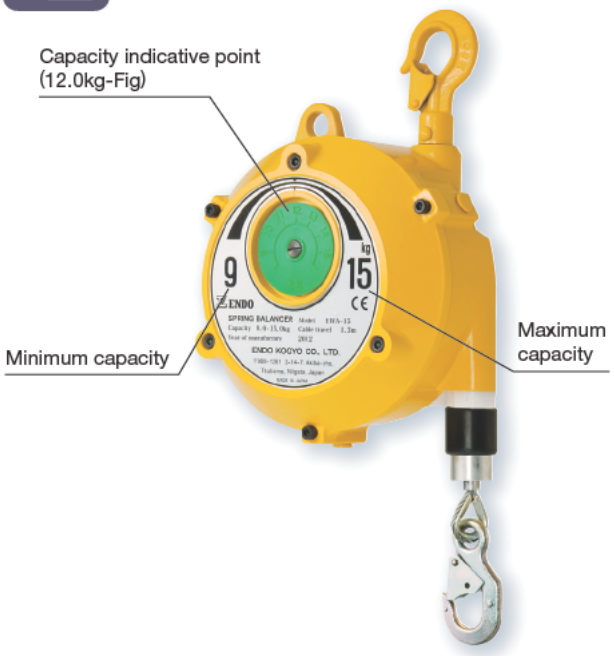

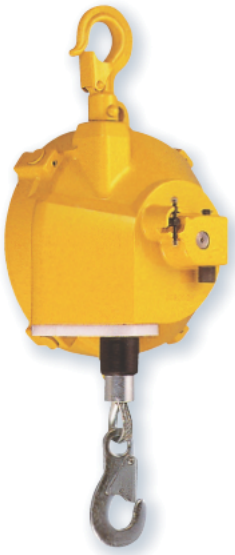

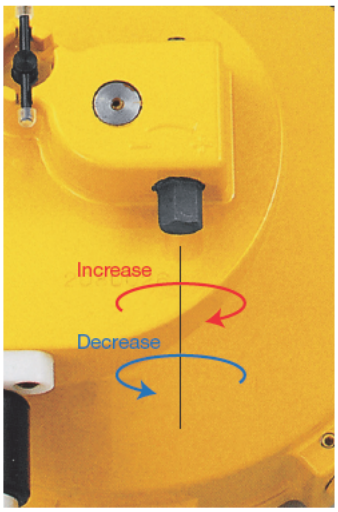

Read the instruction manual carefully for details.

Features

※All features are not always available on all balancers.

Fall arrest device

When spring brakes, safety pin pops out and collides with pin fixed or case to prevent the suspended tools from falling.

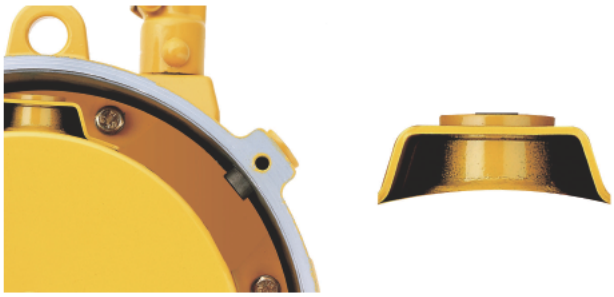

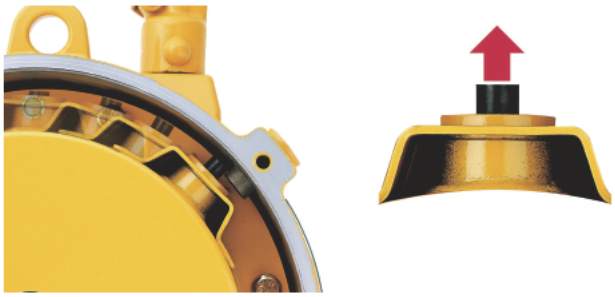

Drum lock device

By changing the position of the pin, you can lock the drum rotating. It provides easy tool/wire rope replacement.

Gauge

The gauge indication contributes to worker recognition on tension adjustment.

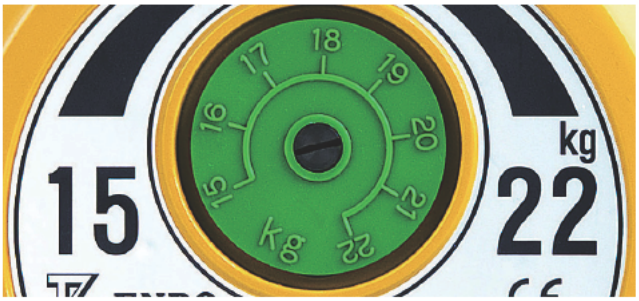

Secondary support hanger

The secondary support hanger is available on every model.

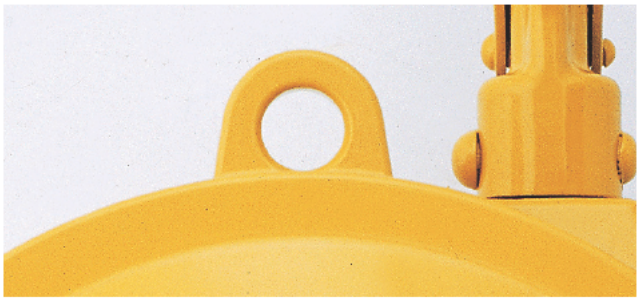

Cartridge spring assembly

Cartridge spring provides easy and safe spring replacement.

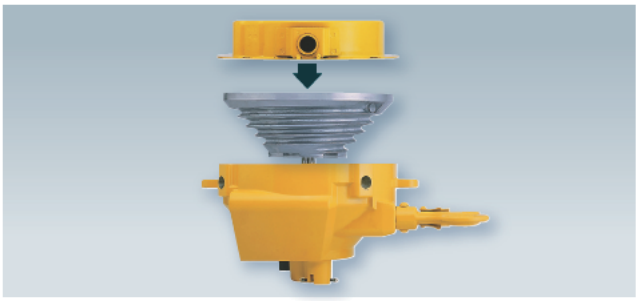

Wire rope replacement

The plug fixing system provides the easy cable replacement.

SPRING BALANCER

Summary

Type	Model	Capacity(kg)	Stroke (m)	Cable dia (φmm)	Mass (kg)	CE	
Light capacity	EK-00	0.5 - 1.5	0.5	2.0	0.2	○	Suitable for light weight tools like an electric driver.
	EK-0	0.5 - 1.5	1.0	3.0	0.5	○	
	ERP-06E	0.3 - 0.6	1.5	2.0	0.4	○	
	ERP-1E	0.5 - 1.0	1.5	2.0	0.4	○	
	ERP-2E	1.0 - 2.0	1.5	2.0	0.4	○	P.7
Standard	EW-3	1.0 - 3.0	1.3	3.0	1.4	○	Most popular series for a welding gun, pneumatic tool etc. Many safety features are equipped.
	EW-5	2.5 - 5.0	1.3	3.0	1.5	—	
	EWS-3	1.5 - 3.0	1.3	3.0	1.9	○	
	EWS-5	3.0 - 5.0	1.3	3.0	2.1	○	
	EWS-7	5.0 - 7.0	1.3	3.0	2.1	○	
	EWF-9	4.5 - 9.0	1.3	4.0	3.5	○	
	EWF-15	9.0 - 15.0	1.3	4.0	3.8	○	
	EWF-22	15.0 - 22.0	1.5	4.76	7.3	○	
	EWF-30	22.0 - 30.0	1.5	4.76	7.7	○	
	EWF-40	30.0 - 40.0	1.5	4.76	9.7	○	
	EWF-50	40.0 - 50.0	1.5	4.76	10.1	○	
	EWF-60	50.0 - 60.0	1.5	4.76	11.1	○	P.8
Large capacity	EWF-70	60.0 - 70.0	1.5	4.76	11.4	○	Suitable for heavy weight devices like a multiple nut runner.
	EWF-90	70.0 - 90.0	2.0	4.76	21.9	○	
	EWF-105	85.0 - 105.0	2.0	4.76	24.0	○	
	EWF-120	100.0 - 120.0	2.0	4.76	27.5	○	
	ETP-14	120.0 - 140.0	1.2	6.0	24.1	○	
	ETP-15	140.0 - 170.0	1.2	6.0	28.7	○	
	ETP-16	170.0 - 200.0	1.2	6.0	29.7	○	P.10
Long stroke	ELF-3	1.5 - 3.0	2.5	3.0	4.6	○	Available for high ceiling applications.
	ELF-5	3.0 - 5.0	2.5	3.0	4.8	○	
	ELF-9	5.0 - 9.0	2.5	3.0	5.4	○	
	ELF-15	9.0 - 15.0	2.5	4.76	10.0	○	
	ELF-22	15.0 - 22.0	2.5	4.76	10.2	○	
	ELF-30	22.0 - 30.0	2.5	4.76	11.0	○	
	ELF-40	30.0 - 40.0	2.5	4.76	14.0	○	
	ELF-50	40.0 - 50.0	2.5	4.76	14.5	○	
	ELF-60	50.0 - 60.0	2.5	4.76	17.1	○	
	ELF-70	60.0 - 70.0	2.5	4.76	18.0	○	P.11
With Ratchet	RSB-15	9.0 - 15.0	1.5	5.0	7.4	—	Available for holding suspend tool on the way of stroke mechanically. Even if no load is applied, its hook can be hold on the way of stroke.
	RSB-22	15.0 - 22.0	1.5	5.0	7.7	—	
	RSB-30	22.0 - 30.0	1.5	5.0	8.1	—	
	RSB-40	30.0 - 40.0	1.5	5.0	8.5	—	P.12

Type	Model	Capacity(kg)	Stroke (m)	Cable/Hose dia (φmm)	Mass (kg)	CE	
With cable snap back prevention device	***EWA-15***	9.0 - 15.0	1.3	4.0	4.7	○	Having device to arrest wire rope snap back in case that a wire rope is cut or suspended tool is disengaged. It will save worker from injury or dangerous occurred by such a situation.
	EWA-22	15.0 - 22.0	1.5	4.76	8.9	○	
	EWA-30	22.0 - 30.0	1.5	4.76	9.3	○	
	EWA-40	30.0 - 40.0	1.5	4.76	11.9	○	
	EWA-50	40.0 - 50.0	1.5	4.76	12.3	○	
	EWA-60	50.0 - 60.0	1.5	4.76	13.3	○	
	EWA-70	60.0 - 70.0	1.5	4.76	13.6	○	P.13
With brake system	***EWF-3B***	1.5 - 3.0	1.3	3.0	4.7	○	Having one-way clutch lining braking system. Provide speedy and safe work by moving up tools slowly.
	EWF-5B	3.0 - 5.0	1.3	3.0	8.9	○	
	EWF-7B	5.0 - 7.0	1.3	3.0	9.3	○	P.14
Air tool balancer	***ATB-0***	0.5 - 1.5	1.3	6.3	1.58	○	Having two function both hose reel and balancer. Urethane hose is wound and air tools can be easily moved up and down.
	ATB-1	1.5 - 3.0	1.3	6.3	1.66	○	
	ATB-2	3.0 - 5.0	1.3	3.6	1.73	—	P.15
Tool hose balancer	***THB-15***	0.5 - 1.5	1.3	8.5	1.9	○	Inside diameter of hose is φ8.5mm.(bigger than ATB series) which supplies enough air to operate the suspended air tool or device.
	THB-25	1.5 - 2.5	1.3	8.5	2.0	○	
	THB-35	2.5 - 3.5	1.3	8.5	2.1	○	
	THB-50	3.5 - 5.0	1.3	8.5	2.1	○	
	THB-65	5.0 - 6.5	1.3	8.5	2.2	○	P.16

Type	Model	Max tension N {kgf}	Stroke (m)	Cable/Hose dia (φmm)	Mass (kg)	CE	
Air tool reel	***ATR-5***	4.9 {5.0}	2.0	10.0	3.8	○	Suitable for retracting hose into the device automatically.
	ATR-5-1	4.9 {5.0}	2.0	10.0	4.2	○	P.17
Torque reel	***ER-3A***	18 {1.8}	3.0	2.38	1.4	○	Long travel cable is suitable for hanging pendant switch and so on. -A type has ratchet system that can be stopped on the way of cable travel.
	ER-3B	18 {1.8}	3.0	2.38	1.3	○	
	ER-5A	25 {2.5}	3.0	2.38	1.5	—	
	ER-5B	25 {2.5}	3.0	2.38	1.4	—	
	ER-10A	49 {5.0}	3.0	2.38	4.5	—	
	ER-10B	49 {5.0}	3.0	2.38	3.8	—	P.18

Light capacity EK ERP

They are suitable for the light weight tool like an electric driver.

EK-00

Light capacity

FUNCTION

Ratchet system spring adjustment

CE Mark available

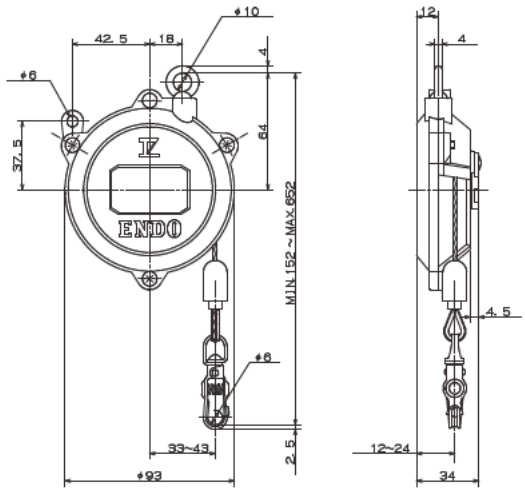

Model	Capacity(kg)	Stroke(m)	Cable dia(φmm)	Mass(kg)
EK-00	0.5~1.5	0.5	2.0	0.2

EK-0

Light capacity

FUNCTION

Ratchet system spring adjustment

CE Mark available

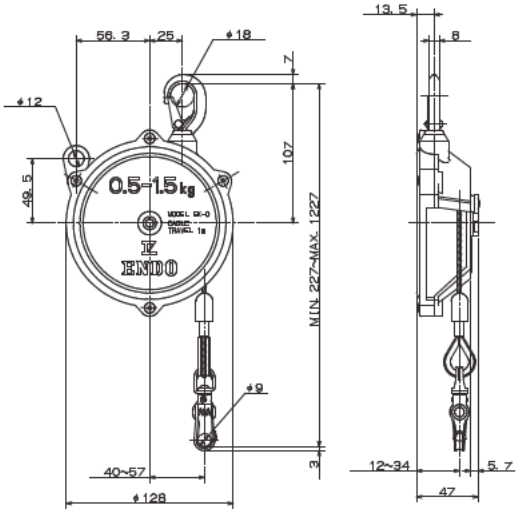

Model	Capacity(kg)	Stroke(m)	Cable dia(φmm)	Mass(kg)
EK-0	0.5~1.5	1.0	3.0	0.5

ERP-06E/1E/2E

Light capacity

FUNCTION

Handle system spring adjustment

CE Mark available

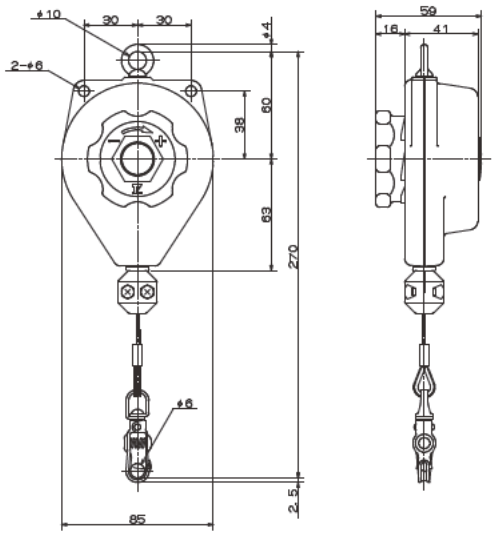

Model	Capacity(kg)	Stroke(m)	Cable dia(φmm)	Mass(kg)
ERP-06E	0.3~0.6	1.5	2.0	0.4
ERP-1E	0.5~1.0	1.5	2.0	0.4
ERP-2E	1.0~2.0	1.5	2.0	0.4

＊ A nylon rope is employed for CE market instead of a nylon coated cable.

Selection of suitable model

Always use a suitable model meeting the total weight of suspended tool or instrument.
The balancer should be selected considering the weight of the tool and accessories.

Installation

- Install Spring balancers uneven not to hit each other when the balancers are installed in a line.
- Always employ a secondary support chain and leave the slack for smooth swivel.
- Always adjust the spring tension to meet the total weight of tool and the application.

Standard EW EWS EWF

Many safety features are epuipped and they are most popular. For a welding gun, Pneumatic tool etc.

EW-3/5

Standard

FUNCTION

- Plug type cable set
- Ratchet system spring adjustment
- CE Mark available

＊ Only EW-3 is available for CE Mark

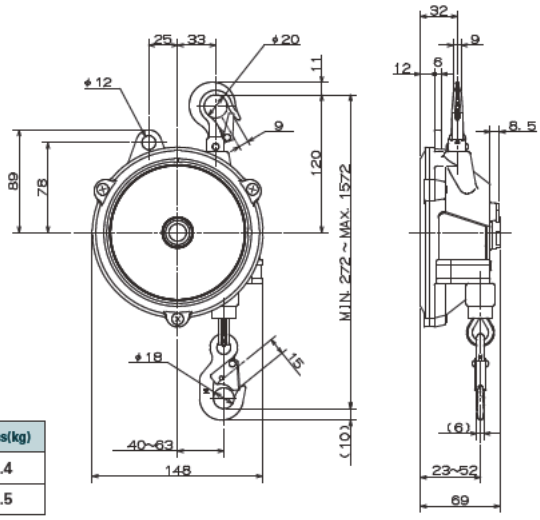

Model	Capacity(kg)	Stroke(m)	Cable dia(φmm)	Mass(kg)
EW-3	1.0-3.0	1.3	3.0	1.4
EW-5	2.5-5.0	1.3	3.0	1.5

EWS-3/5/7

Standard

FUNCTION

- Plug type cable set
- Fall arrest device
- Drum lock device
- Worm gear spring adjustment
- CE Mark available

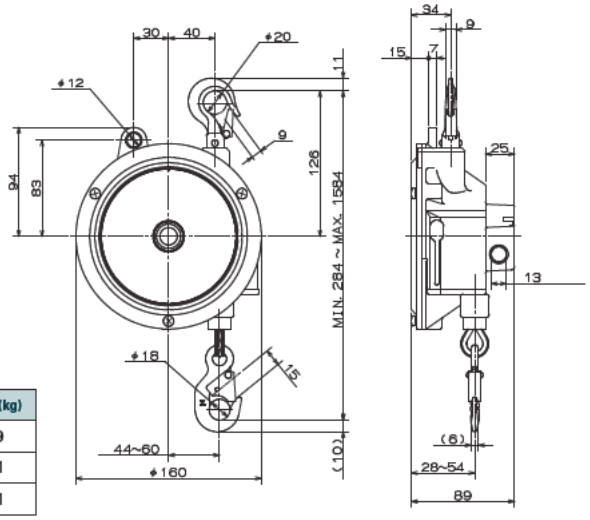

Model	Capacity(kg)	Stroke(m)	Cable dia(φmm)	Mass(kg)
EWS-3	1.5-3.0	1.3	3.0	1.9
EWS-5	3.0-5.0	1.3	3.0	2.1
EWS-7	5.0-7.0	1.3	3.0	2.1

EWF-9/15

Standard

FUNCTION

- Gauge
- Cartridge spring assembly
- Plug type cable set
- Fall arrest device
- Drum lock device
- Worm gear spring adjustment
- CE Mark available

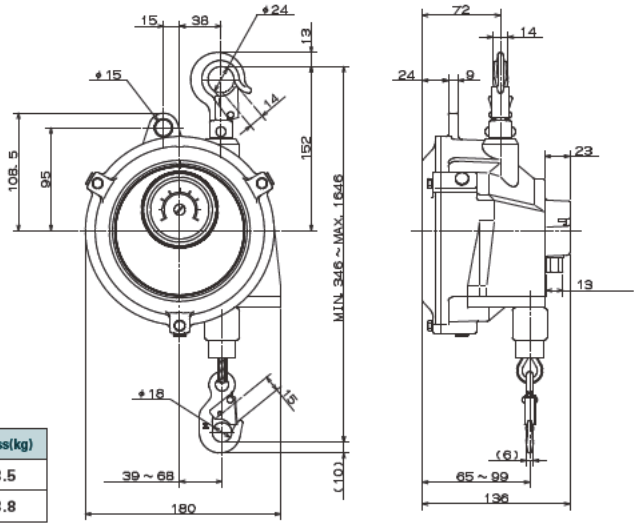

Model	Capacity(kg)	Stroke(m)	Cable dia(φmm)	Mass(kg)
EWF-9	4.5- 9.0	1.3	4.0	3.5
EWF-15	9.0-15.0	1.3	4.0	3.8

Selection of suitable model

Always use a suitable model meeting the total weight of suspended tool or instrument. The balancer should be selected considering the weight of the tool and accessories.

Installation

- Install Spring balancers uneven not to hit each other when the balancers are installed in a line.
- Always employ a secondary support chain and leave the slack for smooth swivel.
- Always adjust the spring tension to meet the total weight of tool and the application.

Standard EWF

Many safety features are epuipped and they are most popular. For a welding gun, Pneumatic tool etc.

EWF-22/30

Standard

FUNCTION

- Gauge
- Cartridge spring assembly
- Plug type cable set
- Fall arrest device
- Drum lock device
- Worm gear spring adjustment
- CE Mark available

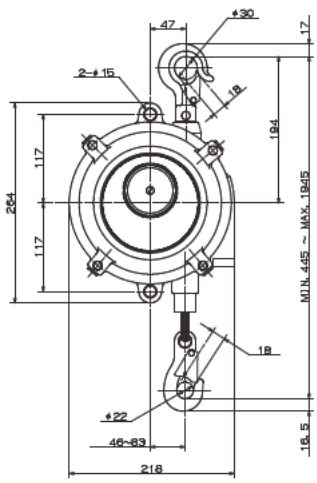

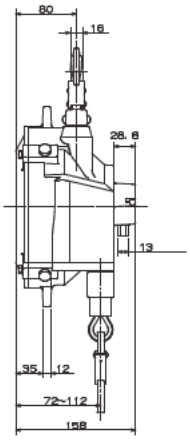

Model	Capacity(kg)	Stroke(m)	Cable dia(φmm)	Mass(kg)
EWF-22	15.0-22.0	1.5	4.76	7.3
EWF-30	22.0-30.0	1.5	4.76	7.7

EWF-40/50

Standard

FUNCTION

- Gauge
- Cartridge spring assembly
- Plug type cable set
- Fall arrest device
- Drum lock device
- Worm gear spring adjustment
- CE Mark available

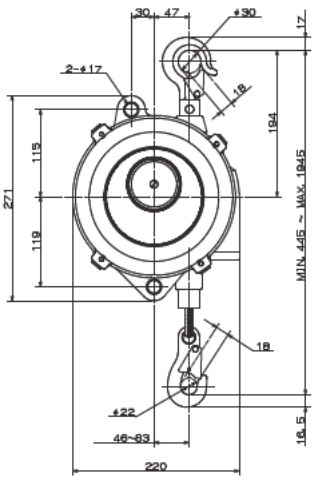

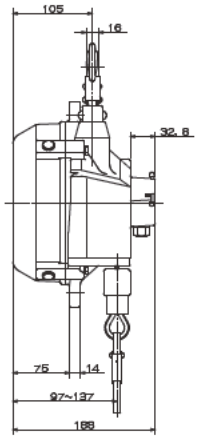

Model	Capacity(kg)	Stroke(m)	Cable dia(φmm)	Mass(kg)
EWF-40	30.0-40.0	1.5	4.76	9.7
EWF-50	40.0-50.0	1.5	4.76	10.1

EWF-60/70

Standard

FUNCTION

- Gauge
- Cartridge spring assembly
- Plug type cable set
- Fall arrest device
- Drum lock device
- Worm gear spring adjustment
- CE Mark available

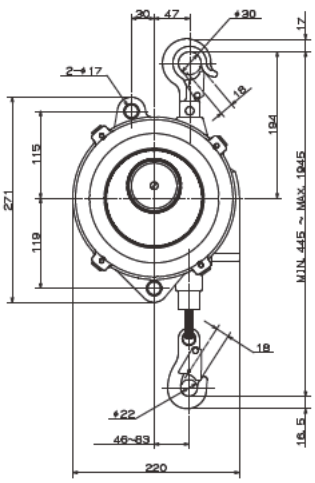

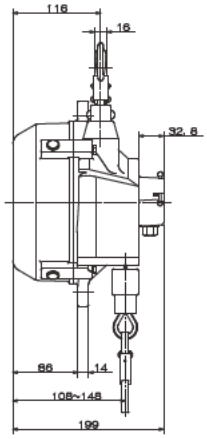

Model	Capacity(kg)	Stroke(m)	Cable dia(φmm)	Mass(kg)
EWF-60	50.0-60.0	1.5	4.76	11.1
EWF-70	60.0-70.0	1.5	4.76	11.4

Selection of suitable model

Always use a suitable model meeting the total weight of suspended tool or instrument.
The balancer should be selected considering the weight of the tool and accessories.

Installation

- Install Spring balancers uneven not to hit each other when the balancers are installed in a line.
- Always employ a secondary support chain and leave the slack for smooth swivel.
- Always adjust the spring tension to meet the total weight of tool and the application.

Large capacity EWF ETP

They are suitable for a heavy weight device like multiple nut runner.

EWF-90/105/120

Large capacity

FUNCTION

- Gauge
- Cartridge spring assembly
- Plug type cable set
- Fall arrest device
- Drum lock device
- Worm gear spring adjustment
- CE Mark available

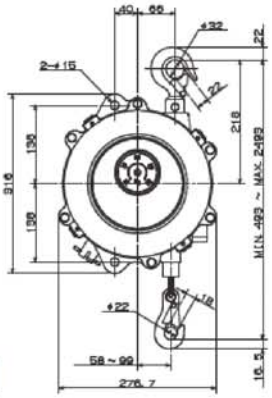

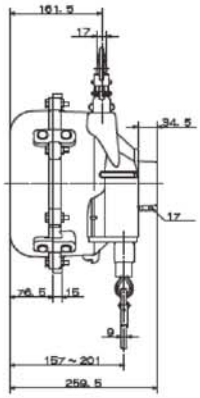

Model	Capacity(kg)	Stroke(m)	Cable dia(φmm)	Mass(kg)
EWF-90	70.0- 90.0	2.0	4.76	21.9
EWF-105	85.0-105.0	2.0	4.76	24.0
EWF-120	100.0-120.0	2.0	4.76	27.5

ETP-14/15/16

Large capacity

FUNCTION

- Fall arrest device
- Worm gear spring adjustment
- CE Mark available

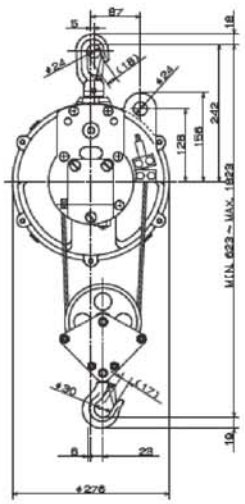

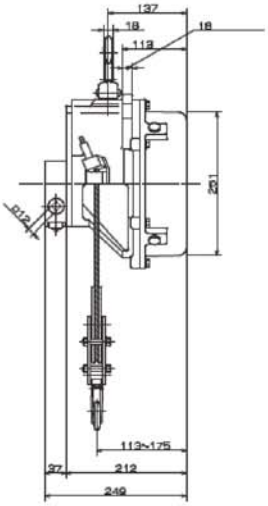

Model	Capacity(kg)	Stroke(m)	Cable dia(φmm)	Mass(kg)
ETP-14	120.0-140.0	1.2	6.0	24.1
ETP-15	140.0-170.0	1.2	6.0	28.7
ETP-16	170.0-200.0	1.2	6.0	29.7

Selection of suitable model

Always use a suitable model meeting the total weight of suspended tool or instrument. The balancer should be selected considering the weight of the tool and accessories.

Installation

- Install Spring balancers uneven not to hit each other when the balancers are installed in a line.
- Always employ a secondary support chain and leave the slack for smooth swivel.
- Always adjust the spring tension to meet the total weight of tool and the application.

ELF series are available for high ceiling application.

ELF-3/5/9

Long stroke

FUNCTION

- Plug type cable set
- Fall arrest device
- Drum lock device
- Worm gear spring adjustment
- CE Mark available

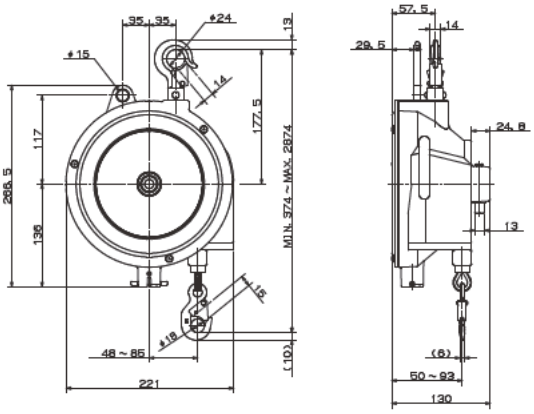

Model	Capacity(kg)	Stroke(m)	Cable dia(φmm)	Mass(kg)
ELF-3	1.5-3.0	2.5	3.0	4.6
ELF-5	3.0-5.0	2.5	3.0	4.8
ELF-9	5.0-9.0	2.5	3.0	5.4

ELF-15/22/30

Long stroke

FUNCTION

- Gauge
- Cartridge spring assembly
- Plug type cable set
- Fall arrest device
- Drum lock device
- Worm gear spring adjustment
- CE Mark available

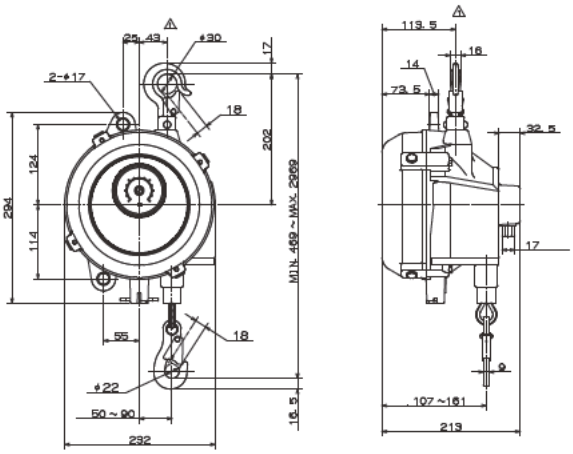

Model	Capacity(kg)	Stroke(m)	Cable dia(φmm)	Mass(kg)
ELF-15	9.0-15.0	2.5	4.76	10.0
ELF-22	15.0-22.0	2.5	4.76	10.2
ELF-30	22.0-30.0	2.5	4.76	11.0

ELF-40/50

Long stroke

FUNCTION

- Gauge
- Cartridge spring assembly
- Plug type cable set
- Fall arrest device
- Drum lock device
- Worm gear spring adjustment
- CE Mark available

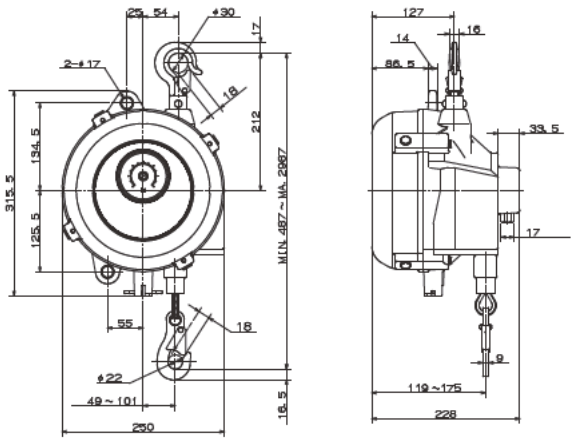

Model	Capacity(kg)	Stroke(m)	Cable dia(φmm)	Mass(kg)
ELF-40	30.0-40.0	2.5	4.76	14.0
ELF-50	40.0-50.0	2.5	4.76	14.5

Selection of suitable model

Always use a suitable model meeting the total weight of suspended tool or instrument.
The balancer should be selected considering the weight of the tool and accessories.

Installation

- Install Spring balancers uneven not to hit each other when the balancers are installed in a line.
- Always employ a secondary support chain and leave the slack for smooth swivel.
- Always adjust the spring tension to meet the total weight of tool and the application.

ELF-60/70

Long stroke

FUNCTION

- Gauge
- Cartridge spring assembly
- Plug type cable set
- Fall arrest device
- Drum lock device
- Worm gear spring adjustment
- CE Mark available

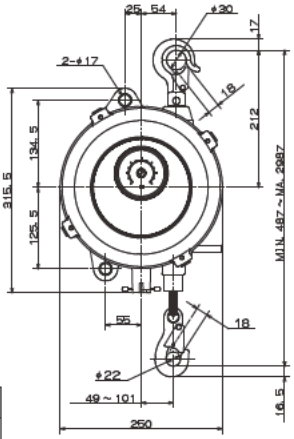

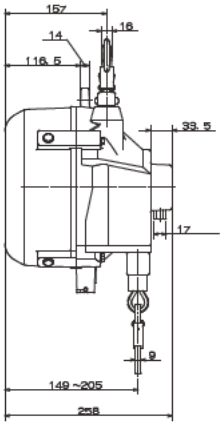

Model	Capacity(kg)	Stroke(m)	Cable dia(φmm)	Mass(kg)
ELF-60	50.0-60.0	2.5	4.76	17.1
ELF-70	60.0-70.0	2.5	4.76	18.0

RSB-15

With Ratchet

FUNCTION

- Ratchet device
- Fall arrest device
- Worm gear spring adjustment

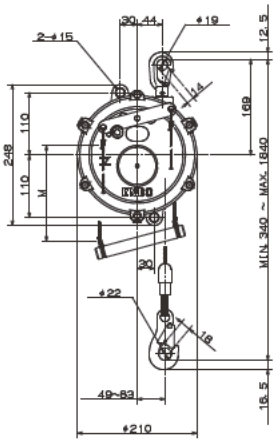

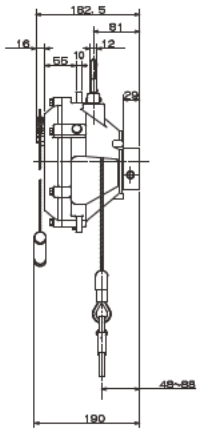

Model	Capacity(kg)	Stroke(m)	Cable dia(φmm)	Mass(kg)
RSB-15	9.0-15.0	1.5	5.0	7.4

RSB-22/30/40

With Ratchet

FUNCTION

- Gauge
- Ratchet device
- Fall arrest device
- Worm gear spring adjustment

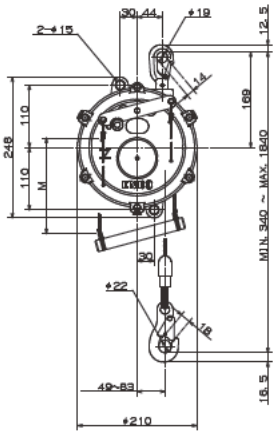

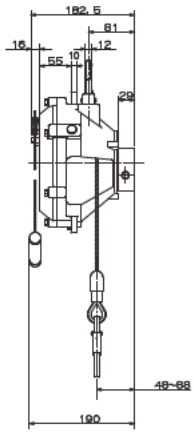

Model	Capacity(kg)	Stroke(m)	Cable dia(φmm)	Mass(kg)
RSB-22	15.0-22.0	1.5	5.0	7.7
RSB-30	22.0-30.0	1.5	5.0	8.1
RSB-40	30.0-40.0	1.5	5.0	8.5

Selection of suitable model

Always use a suitable model meeting the total weight of suspended tool or instrument. The balancer should be selected considering the weight of the tool and accessories.

Installation

- Install Spring balancers uneven not to hit each other when the balancers are installed in a line.
- Always employ a secondary support chain and leave the slack for smooth swivel.
- Always adjust the spring tension to meet the total weight of tool and the application.

Spring balancer with cable snap back prevention device

Features

In case that a cable installed in a spring balancer is cut or a suspended tool is disengaged, the cable will snap back due to the tension of spring involved in a spring balancer, causing the dangerous situation such as the injury to personnel etc. This new device has developed to protect personnel from such the danger.

Description of the device

As soon as a cable is cut, a drum revolves rapidly winding a cable up. Rapid revolution of the drum generates centrifugal force. The centrifugal force makes a Ratchet on a spring case pushed out and the ratchet sticks in a wheel fixed on a cover, stopping the revolution of the drum.

Model	Capacity(kg)	Stroke(m)	Cable dia(φmm)	Mass(kg)
EWA-15	9.0-15.0	1.3	4.0	4.7
EWA-22	15.0-22.0	1.5	4.76	8.9
EWA-30	22.0-30.0	1.5	4.76	9.3
EWA-40	30.0-40.0	1.5	4.76	11.9
EWA-50	40.0-50.0	1.5	4.76	12.3
EWA-60	50.0-60.0	1.5	4.76	13.3
EWA-70	60.0-70.0	1.5	4.76	13.6

＊The cable snap back protection device for 70kg to 120kg capacity is available on request.

FUNCTION

- Gauge
- Cartridge spring assembly
- Plug type cable set
- Fall arrest device
- Snap back protection
- Drum lock device
- Worm gear spring adjustment
- CE Mark available

EWA-15

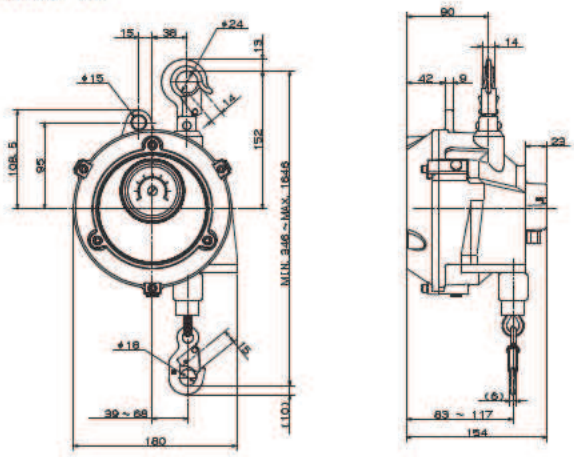

EWA-22/30

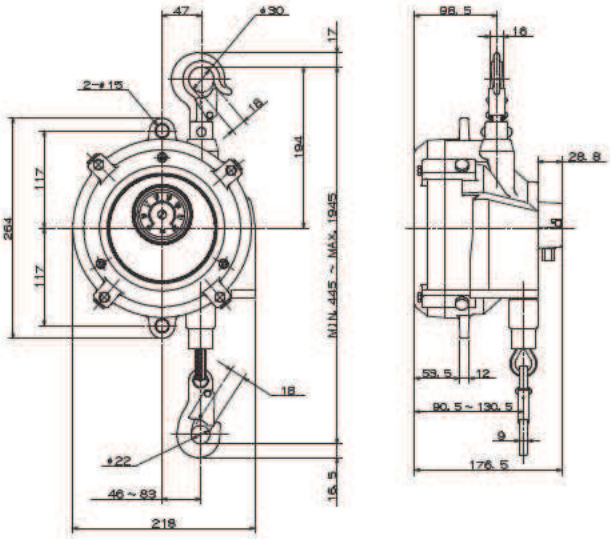

EWA-40/50/60/70

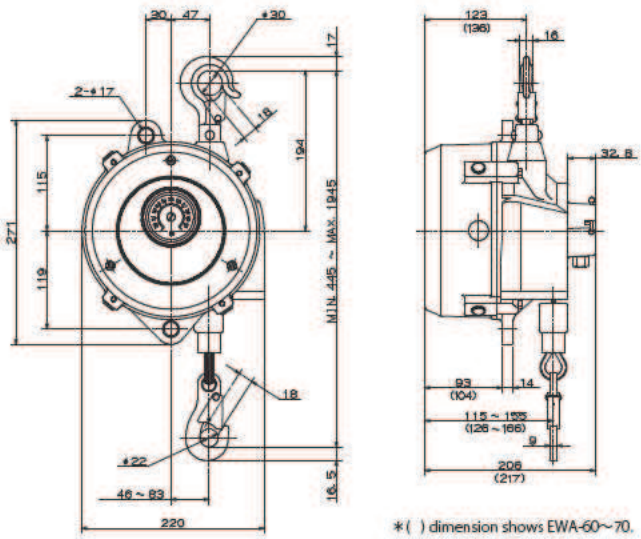

＊( ) dimension shows EWA-60~70.

Spring balancer with brake system

Features

It uses one-way clutch lining braking system and it hangs up tools slowly.
Snap back with slow speed helps speedy and safe work for you.
Set brake free, you can use it as a normal balancer.

Model	Capacity(kg)	Stroke(m)	Cable dia(φmm)	Mass(kg)
EWF-3B	1.5-3.0	1.3	3.0	4.7
EWF-5B	3.0-5.0	1.3	3.0	8.9
EWF-7B	5.0-7.0	1.3	3.0	9.3

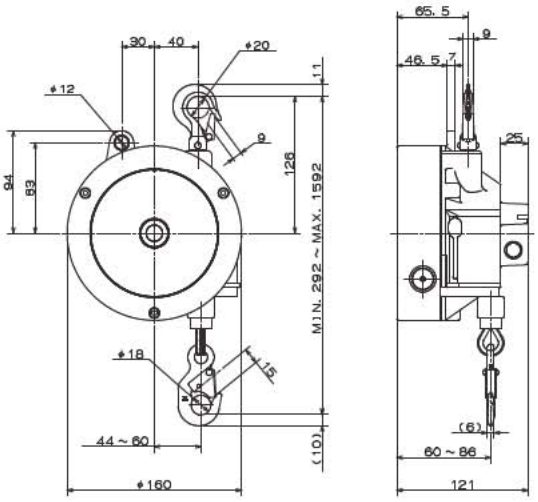

FUNCTION

- Cartridge spring assembly
- Plug type cable set
- Fall arrest device
- Drum lock device
- Worm gear spring adjustment
- CE Mark available

Air tool balancer ATB

Features

Instead of the wire rope, the urethane hose is wound and air tools can be easily moved up and down.
Casing and drum are made of acrylonitrile butadiene-styrene resin and they are light.
The diameter of hose nipple is φ9mm at inlet portion.
And swivel joint size Rc.1/4 at outlet portion.

Working conditions

- Application area : Indoor and normal atmospheric conditions
- Temperature rang : -10℃ to +40℃
- Application fluid : Air
- Maximum air pressure : 1.0MPa {10kgf/cm²}

Model	Capacity(kg)	Hose travel (m)	Air Inlet.(φmm)	Mass(kg)
ATB-0	0.5-1.5	1.3	6.3	1.58
ATB-1	1.5-3.0	1.3	6.3	1.66
ATB-2	3.0-5.0	1.3	6.3	1.73

Dimensions(mm)

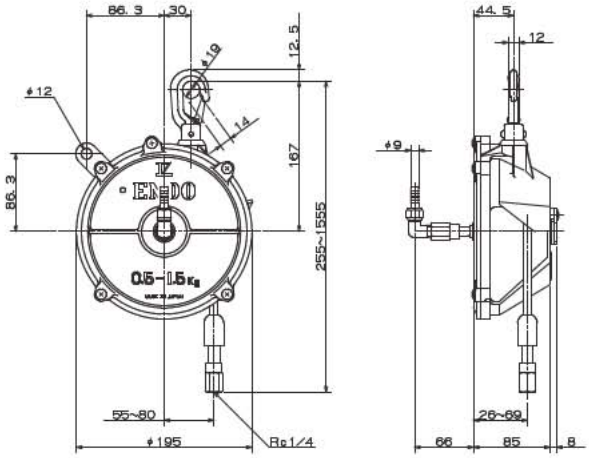

Flow characteristics

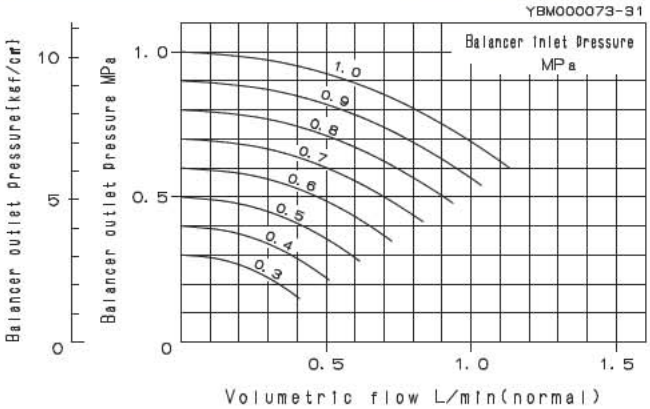

FUNCTION

- Ratchet system spring adjustment
- Cushion cover available
- CE Mark available

※ATB-2 is not available for CE Mark.

Accessories

Protect wire set

Product number	Available model
LBP000794	ATB-0,1,2

The protector is available for tool fall protection caused by unintentionally detaching an air tool from a coupling.

Tool hose balancers THB

Features

Instead of the wire rope, the urethane hose is wound and air tools can be easily moved up and down.
When the spring failure is happened, the fall prevention device will operate and stop the suspended tool or device.
The inside diameter of hose is φ8.5mm which supplies enough air to operate the suspended air too or device.

Working conditions

- Application area : Indoor and normal atmospheric conditions
- Temperature rang : -10℃ to +40℃
- Application fluid : Air
- Maximum air pressure : 1.0MPa {10kgf/cm²}

Model	Capacity(kg)	Hose travel (m)	Hose inside diameter. (φmm)	Mass(kg)
THB-15	0.5-1.5	1.3	8.5	1.9
THB-25	1.5-2.5	1.3	8.5	2.0
THB-35	2.5-3.5	1.3	8.5	2.1
THB-50	3.5-5.0	1.3	8.5	2.1
THB-65	5.0-6.5	1.3	8.5	2.2

Dimensions(mm)

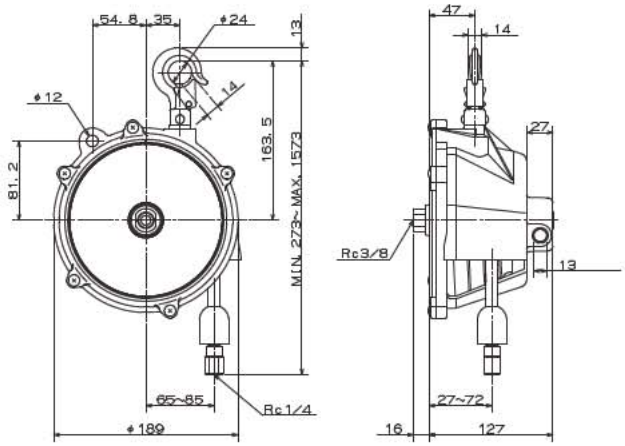

Flow characteristics

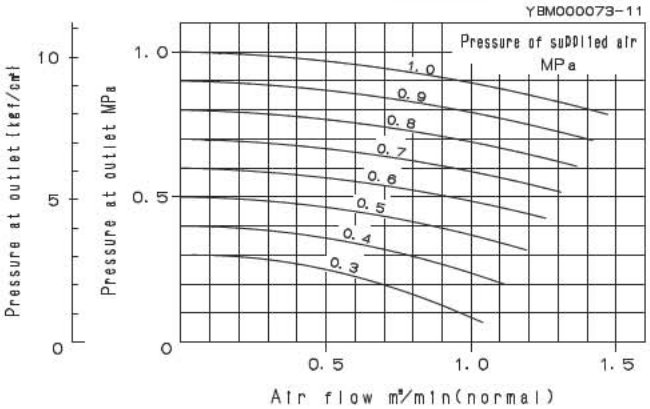

FUNCTION

- Worm gear spring adjustment
- Cushion cover available
- Fall arrest device
- CE Mark available

Special accessories

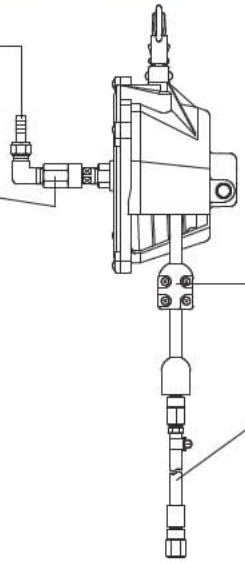

Swivel elbow fitting for air inlet (outer dia 10.5mm)

Parts No. **LBP000654**

Swivel Joint

Parts No. **LBP000659**

Protect wire

Parts No. **LBP000801**

The protect wire prevents accidental dropping and / or disconnection between the hose and tool.

Coupling socket (Outer dia 11.3mm)

Parts No. **LBP000784**

Adjustable hose stopper

Parts No. **LBP000800**

Special hose for an extended length (with a swivel joint ;1m)

Parts No. **LBP000785**
(max. 2m extension)

Air tool reel ATR

Features

An included spring works to retract a hose into the device automatically.
A contained hose solves the short of air consumption for air tool owing to a large inner diameter of 10φ.
A ratchet system applied for the device can keep a tool suspended at any position on the hose travel where you want.

※On-off work of ratchet system is available through knob operation.
The fall preventive system from the tool drop works when the included spring has been broken.

ATR-5 is installed with top hook and ATR-5-1 is installed with bracket.

Model	Max tension N {kgf}	Hose travel (m)	Air Inlet.(φmm)	Mass(kg)
ATR-5	4.9 {5.0}	2.0	10.0	3.8
ATR-5-1	4.9 {5.0}	2.0	10.0	4.2

Flow characteristics

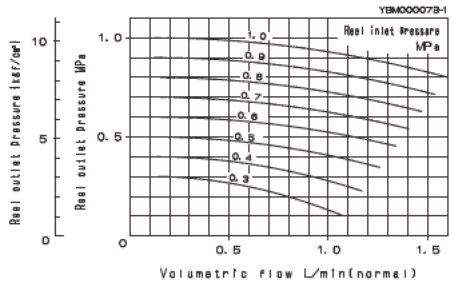

Tension courves

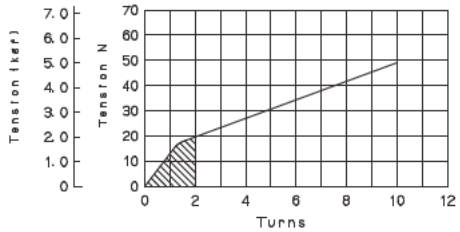

Dimensions(mm)

ATR-5

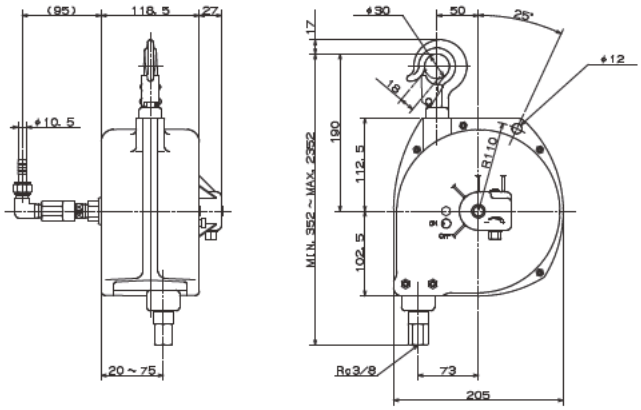

ATR-5-1

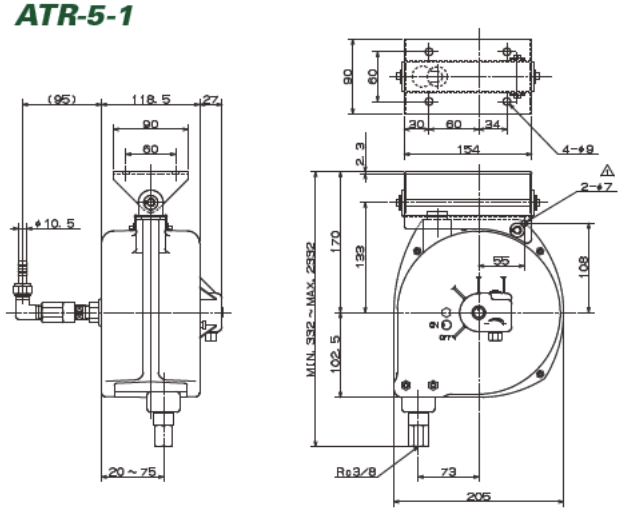

Accessories

Special hose for extended length
(with a swivel joint)

1m Parts No. LBP000659
2m Parts No. LBP000664
3m Parts No. LBP000665

Adjustable hose stopper

Parts No. LRP007933

FUNCTION

- Worm gear spring adjustment
- Ratchet device
- Fall arrest device
- CE Mark available

Torque reel ER

Features

This model can be stopped on the way of cable travel because of ratchet system.(-A type)
The jamming of the cable will not occur because of its cylindrical drum.
They has long cable travel (ER-3A/3B, ER-5A/5B=3m, ER-10A/10B=4m) and are designed light and compact.

FUNCTION

Ratchet system spring adjustment

Cushion cover available

CE Mark available
※Only ER 3A/ER 3B is available for CE Mark

Model	Initial Max. tension (tension at retracted)		Active cable travel (m)	Tension build-up, full length of cable		the number of available spring winding	with or without ratchet	Diameter of cable (φmm)	Mass(kg)
	N	{kgf}		N	{kgf}				
ER-3A	18	1.8	3	12	1.2	about 16	○	2.38	1.4
ER-3B	18	1.8	3	12	1.2	about 16	×	2.38	1.3
ER-5A	25	2.5	3	25	2.5	about 13	○	2.38	1.5
ER-5B	25	2.5	3	25	2.5	about 13	×	2.38	1.4
ER-10A	49	5.0	4	49	5.0	about 13	○	2.38	4.5
ER-10B	49	5.0	4	49	5.0	about 13	×	2.38	3.8

(note) The tension increases gradually as the cable is pulled out. For example, on ER-5A, supporting that the tension of spring is adjusted at 25N {2.5kgf} when the cable is fully retracted, the tension of spring (when the cable is pulled out 3m) is equal to 50N (25+25) {2.5+2.5=5kgf}

Tension curves

The relation with the number of drum revolving and the length of winding cable

The length of winding cable per one revolving of drum ***ER-3A/3B,5A/5B*** ··· about 350mm ***ER-10A/10B*** ··· about 480mm

ER-3A/3B

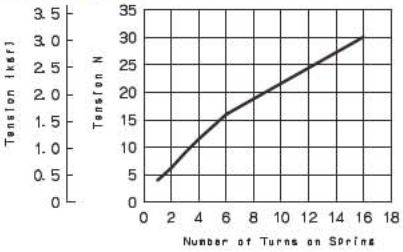

ER-5A/5B

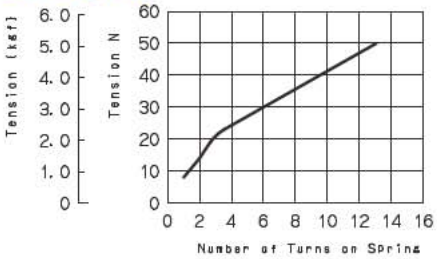

ER-10A/10B

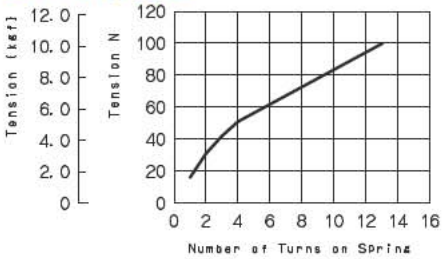

Dimensions(mm)

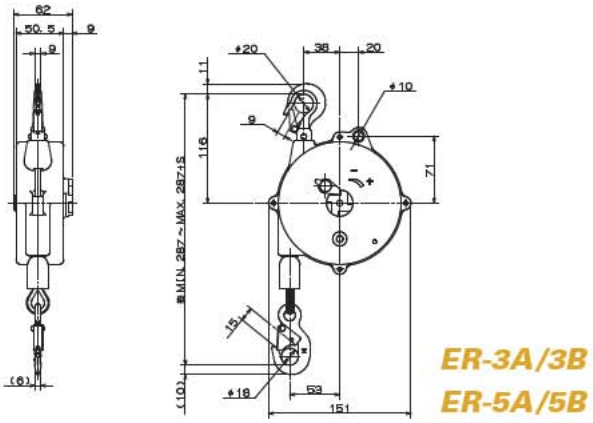

ER-3A/3B
ER-5A/5B

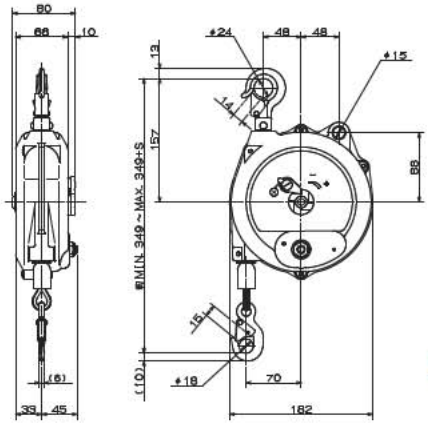

ER-10A/10B

Accessories

Cushion

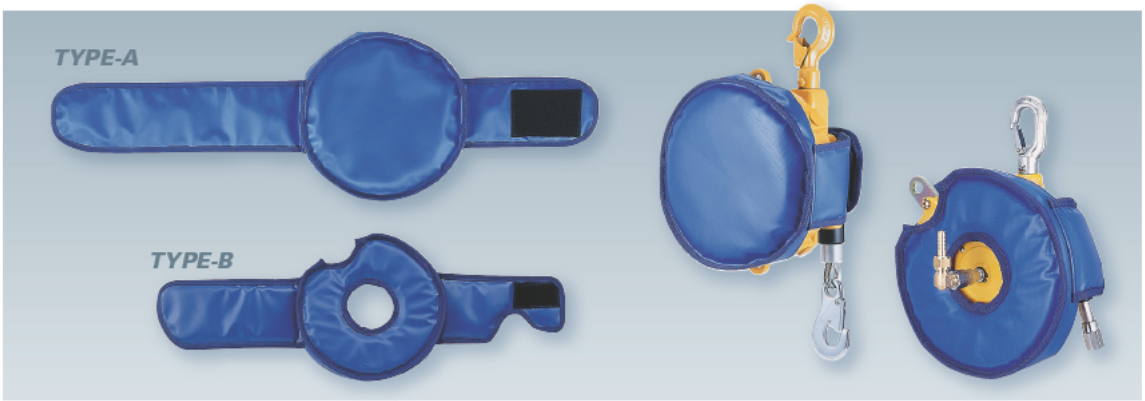

TYPE-A
Parts No. **P2B300789**
EWF-22 – 120
EWF-90A – 120A

TYPE-B
Parts No. **P2B300799**
ATB series
THB series

Insulation Hook

Parts No.	Diameter of cable (φmm)	Available model
LBP000145	4.0	EWF-9・15
LBP000146	4.76	EWF-22–70, EWA-22–70
LBP001185	4.76	EWF-90–120, EWF-90A–120A

Owing to insulation of holder, it becomes unnecessary to use the insulation made of ceramic (or others) which is casual at present.
This composes one set with special cable.

Adjustable cable stopper

Split type

Plug-in type

Type	Parts No.	Available model
Split	LBP000127	RSB-15—40
	LBP000150	ER-3A/3B—ER-10A/10B
Plug-in	LBP000151	EW(EWS)-3—7, ELF-3—9
	LBP000131	EWF-9/15
	LBP000132	EWF-22—70, ELF-15—70, EWF-90—120, EWF-90A—120A

Karabina

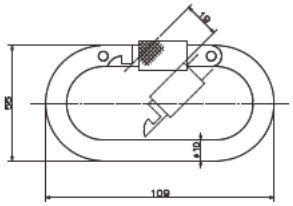

Parts No.	Breaking load
P2S400104	16.7kN {1700kgf}

S Type hook

Model	Parts No.	Working load	Mass(kg)
SH-60	LBP000231	590N {60kgf}	0.16
SH-150	LBP000232	1470N {150kgf}	0.43

Swivel hook

The swivel hook enables 360° flexible operation.
If you do rotation work, the swivel hook reduce cable damage.

Parts No.	Available model
P2B401118	EWF-22-70

Plain trolley

Model	Capacity(kg)	Minimum radius for corner (mm)	Beam widths(B) (mm)	Mass(kg)
PTF-60	60	—	75	0.8
PTF-125	125	600	50/75	1.6
PTF-250	250	900	75/100/125	4.2

Several kind of balancers can not be connected with plain trolleys directly.
Please use a Karabina for connection.

PTF-60

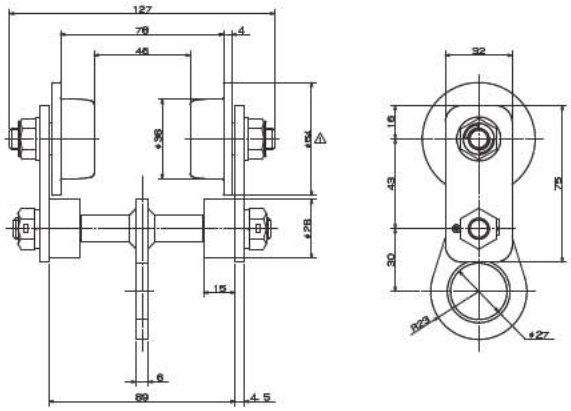

PTF-125·250

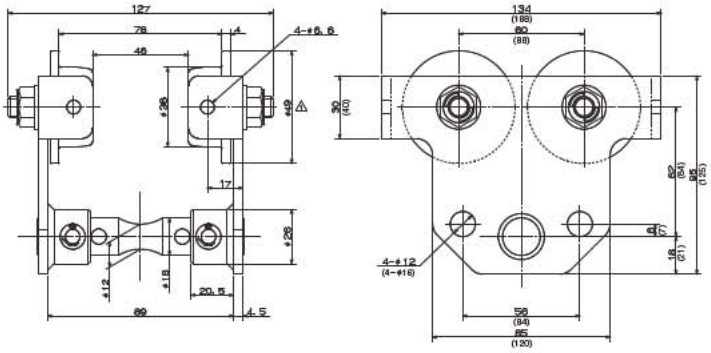

※( ) dimension shows PTF-250.

Corresponding table of Accessories

Parts No.	Name		EW3·5	EWS	EWF 9·15	EWF 22-70	EWF 90-120	EWA	ELF 3-9	ELF 15-70	ER	RSB	ATB	THB	ATR
LBP000145	Insulation hook	φ4.0			○										
LBP000146	Insulation hook	φ4.76				○		○							
LBP001185	Insulation hook	φ4.76					○								
P2B401118	Swivel hook					○									
LBP000127	Stopper											○			
LBP000150	Stopper										○				
LBP000151	Stopper		○	○					○						
LBP000131	Stopper				○										
LBP000132	Stopper					○	○	○		○					
P2B300789	Cushion	TYPE-A				○		○							
P2B300799	Cushion	TYPE-B											○	○	
P2S400104	Karabina		○	○	○	○	○	○	○	○	○	○	○	○	○

※EWF-90－120 is including EWF-90A－120A.

Eco Balancer Type-X Type-Y Type-C

EWF-Type-X / EWF-Type-Y

Features

- The world's first "Eco-Friendly" spring balancer
- Synthetic food grade grease (H1 grade)
- High potential capability and endurance
- Flexible adaptability in a wide range of 1-120kg models

Specifications

	Treating Method					
Type	Y Type			X Type		
Casing	Unpainted			Unpainted		
Cover	Unpainted			Unpainted		
Upper Hook	Zinc plating			Zinc plating		
Rivet	Clear painting			Stainless steel		
Rope	Nylon rope	White	EW(EWS)-3Y-7Y	Nylon rope	White	White EW(EWS)-3X-7X
		Black	EWF-9Y-15Y		Black	Black EWF-9X-15X
	SUS Wire rope		EWF-22Y-120Y	SUS Wire rope		EWF-22X-120X
Lower Hook	Standard(Zinc plated)			Stainless steel		
Pin(EWF-9-120)	Zinc plating			Zinc plating		
Plug	Standard			Stainless steel		
Bolts	Standard(Zinc plated)			Stainless steel		
Screws	Standard(Zinc plated)			Stainless steel		
Grease	Standard grease(on Spring)			Food grease(on Spring)		

For the next generation

Through the development of the product that is environmentally friendly, we contribute to the sustainable development of community.

EWF-Type-C

Plastic Drum

Abrasion Powder in greatly reduced comparing with the existing model.

Fall Arrest Device

Drum lock system in equipped to prevent to fall the tools in case of the spring breakage.

Replaceable Wire rope

Easy wire rope replacement is provided with the plug-in method.

Riveted Spring

Outer riveted spring helps safety replacement of the spring.

Specifications

Model	Capacity(kg)	Stroke(m)	Wire rope dia.(mm)	Mass(kg)
EWF-3C	1.5-3.0	1.3	ϕ3	1.7
EWF-5C	3.0-5.0	1.3	ϕ3	1.9
EWF-7C	5.0-7.0	1.3	ϕ3	1.9

ISO9001 JP97/010458
SCOPE:Head office, Plant

ISO14001 JP10/070952
SCOPE:Head office, Plant

ENDO KOGYO CO., LTD.

http://www.endo-kogyo.co.jp

3-14-7, Akibacho, Tsubame, Niigata, Japan
Tel. 0256-62-5133 Fax. 0256-62-5772

ENDO KOGYO INDIA PVT., LTD.

http://www.endo-india.co.in

101, First Floor, Aditya Towers
Lulla Nagar, Off Kondhwa Road,
Pune – 411 040
Tel. +91-86-00042752 Mail. info@endo-india.co.in

※Items shown in this catalogue are subject to change without notice.
※Please note we no have responssibility for missing and fault on the printing.

EC-68F 2016年3月 2,000 Ⓣ